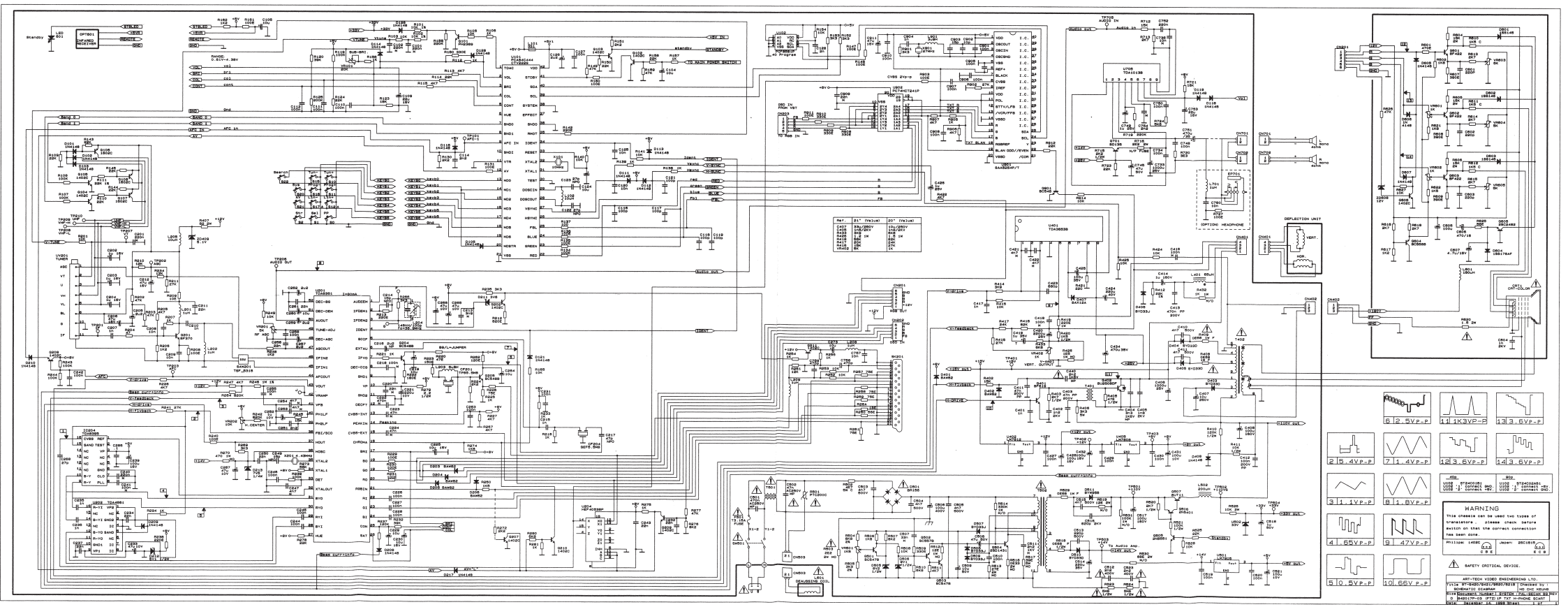

6 2.5VP-P
11 1K3VP-P
13 3.6VP-P
2 5.4VP-P
7 1.4VP-P
12 3.6VP-P
14 3.6VP-P
3 1.1VP-P
8 1.8VP-P
4 .65VP-P
9 47VP-P
5 0.5VP-P
10 .66VP-P
WARNING
This chassis can be used two types of transistors , please check before switch on that the correct connection has been done.
Philips: 14D8C
Japan: 28C1815
SAFETY CRITICAL DEVICE.
ART-TECH VIDEO ENGINEERING LTD.
Title BY-2420/8420/9820/8218 Checked by :
SCHEMATIC DIAGRAM
HO CHI KEUNG
Size Document Number SYSTEM PAL-SECAM BG REV
D 8420177-03 (FIZ) IF TV-PHONE SCART
Date: December 16, 1998 Sheet 1 of 1