SCHEMATIC DI

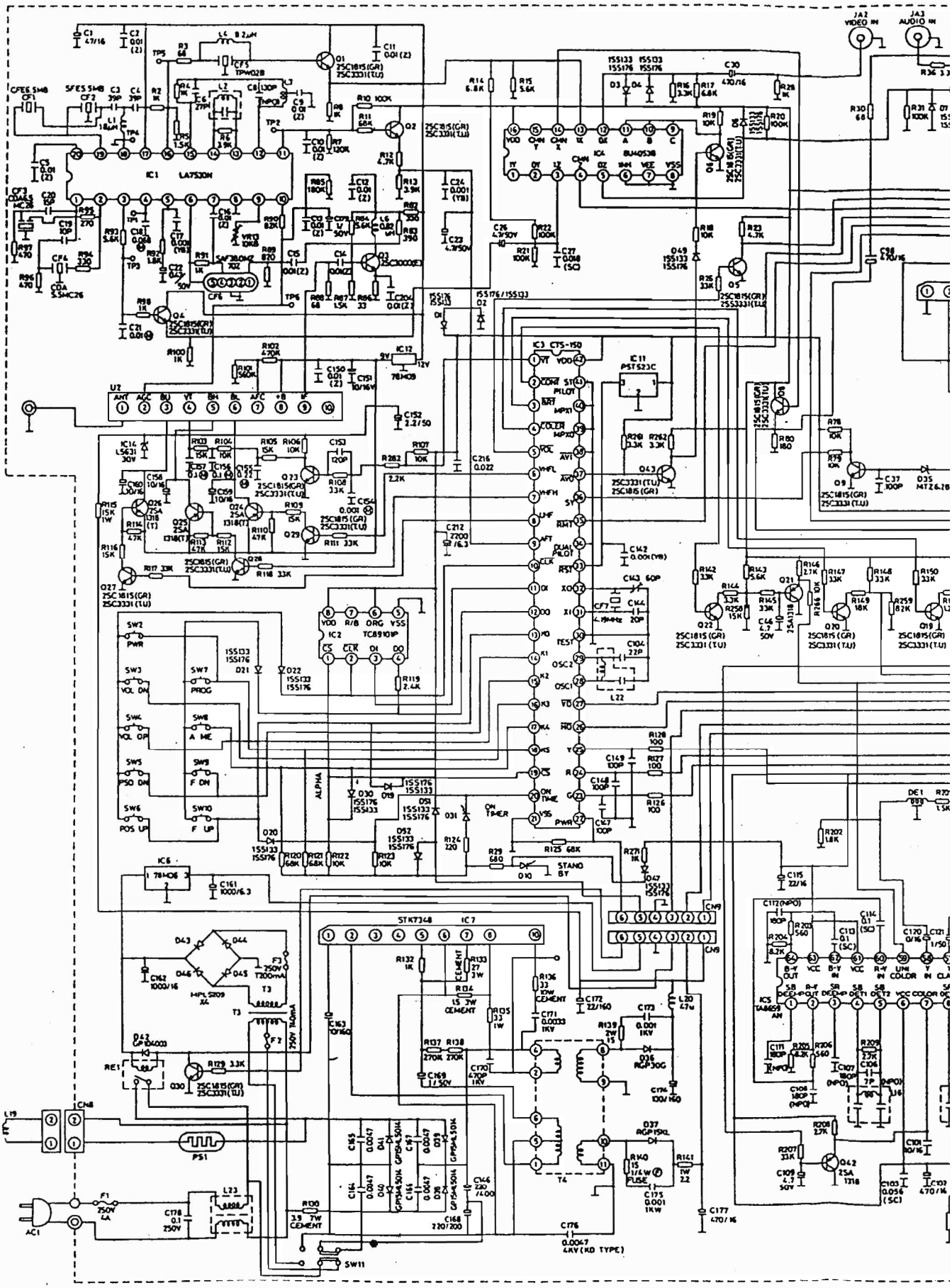

C DIAGRAM

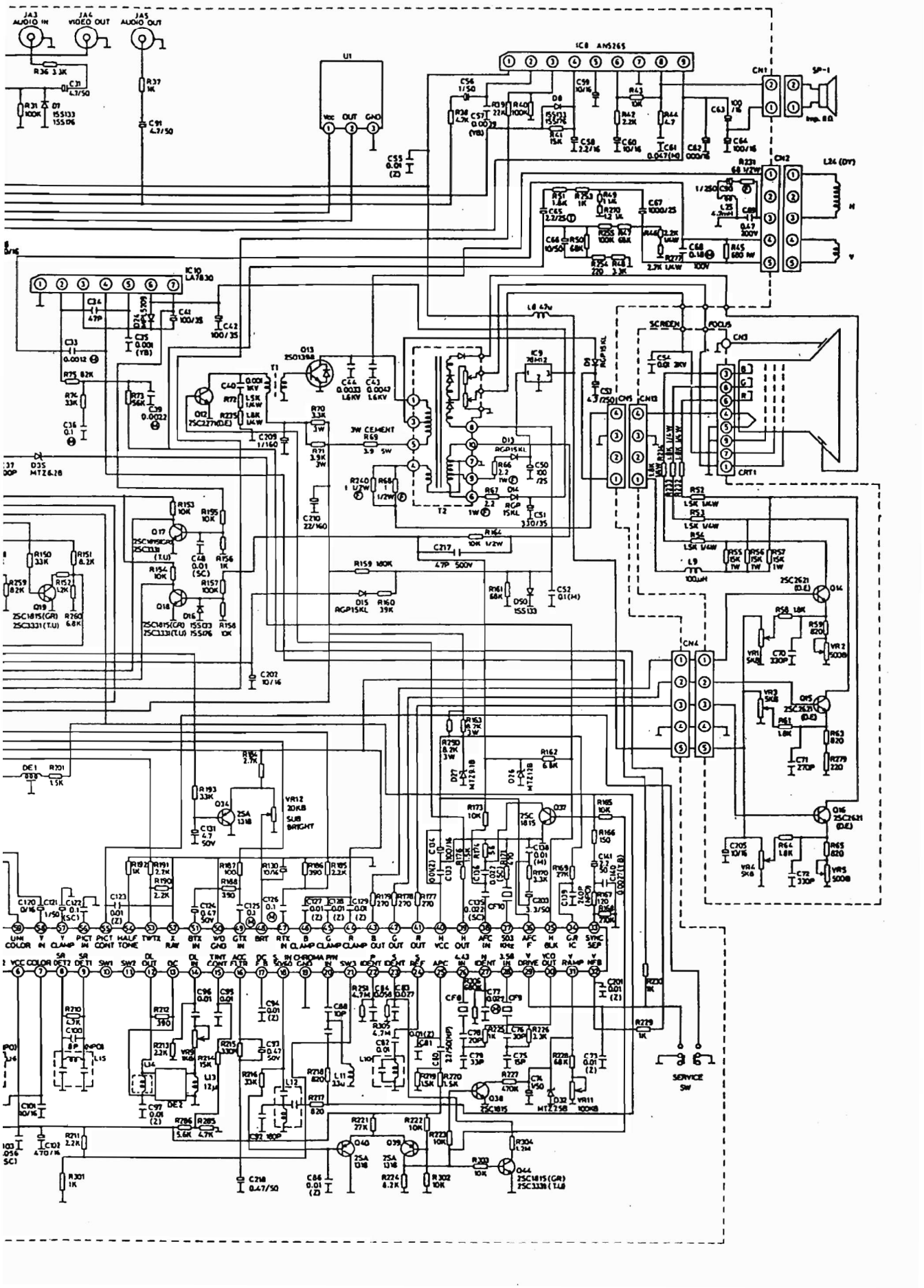

JA3 AUDIO IN
JA4 VIDEO OUT
JA5 AUDIO OUT
IC8 AN5265
U1
Vcc OUT GND
CN1
SP-1
CN2
L24 (DY)
IC10 LA7830
SCREEN
FOCUS
CN3
CRT1
CN5
CN13
CN4
T1
T2
3W CEMENT
SERVICE SW