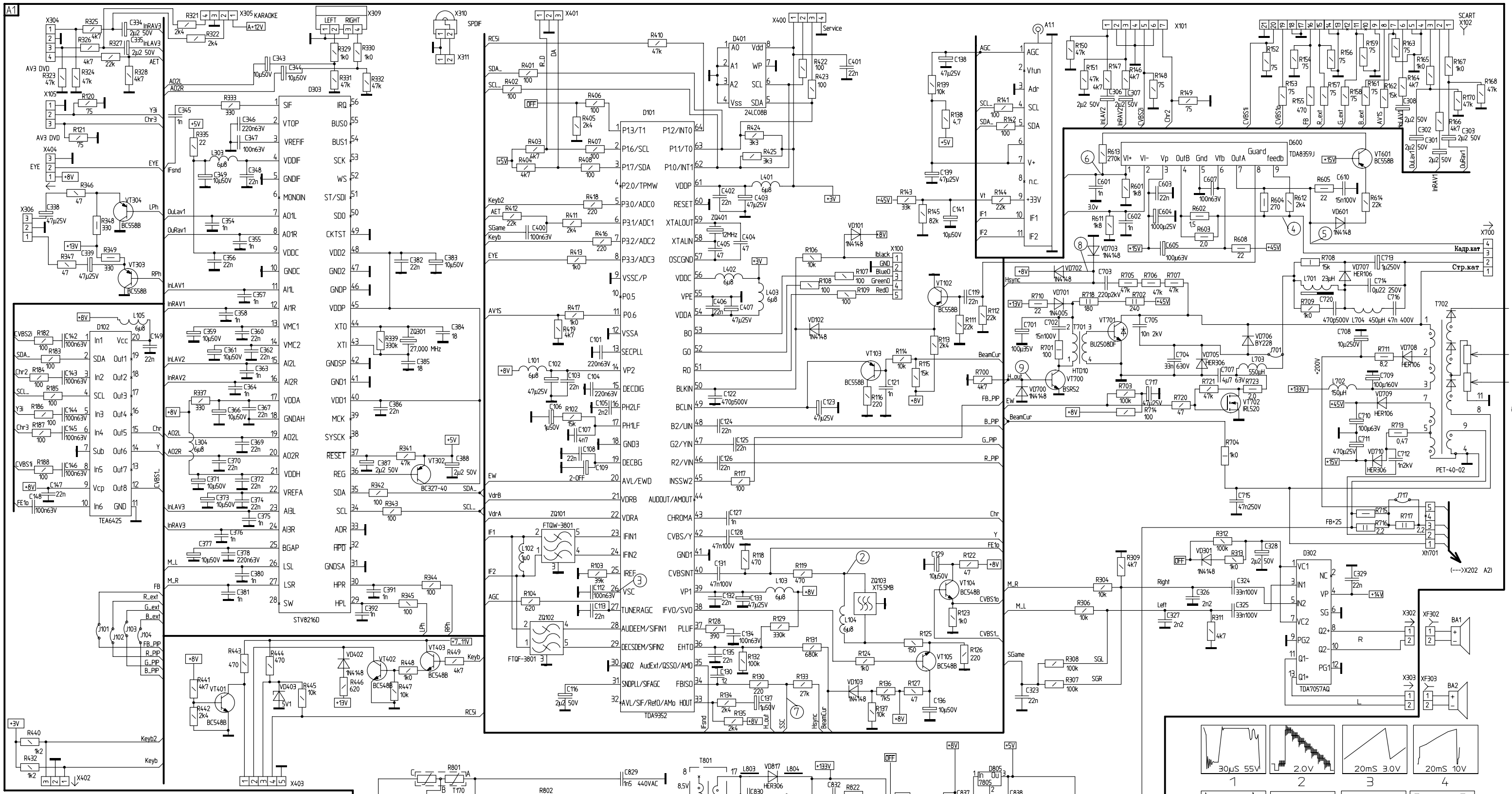
A1
TEA6425
STV8216D
TDA9352
TDA4605-2
TDA7057AQ
TDA8359J
24LC08B
FTQW-3801
FTQF-3801
ZQ101
ZQ102
ZQ103
ZQ401
ZQ301
XT5.5MB
12MHz
27,000 MHz
SCART X102
Screen
Focus
Anode
Кадр.кат
Стр.кат
PET-40-02
(--->X202 A2)
Xh701
XF302
XF303
BA1
BA2
X302
X303
X700
X800
X801
X805
X806
X851
XF801
XF852
Xh853
XF452
Xh450
X456
X402
X403
X404
X306
X304
X305
X309
X310
X311
X105
X401
X400
X101
X100
X302
X303
T702
T801
T170
L801
L802
2x27mH
PET-40-02
KIPD45BM
TSOP1836
VPT-19-3,15
FU851
FU802
FU804
VP4-1A
VP4-2A
SPP04N60S5
MCR22-8
PBYR745F
TL431 CZ-AP
CNY17-2
D801-1
D801-2
D802
D803
D804
D805
D806
D808
D809
D810
D811
D812
D814
D815
D817
D818
D819
D821
D824
D828
D830
D832
D833
D834
D835
D836
D837
D840
D842
D843
D844
D845
D846
D847
D849
D850
D851
D852
D853
D854
D855
D856
D857
D858
D859
D860
D861
D862
D863
D864
D865
D866
D867
D868
D869
D870
D871
D872
D873
D874
D875
D876
D877
D878
D879
D880
D881
D882
D883
D884
D885
D886
D887
D888

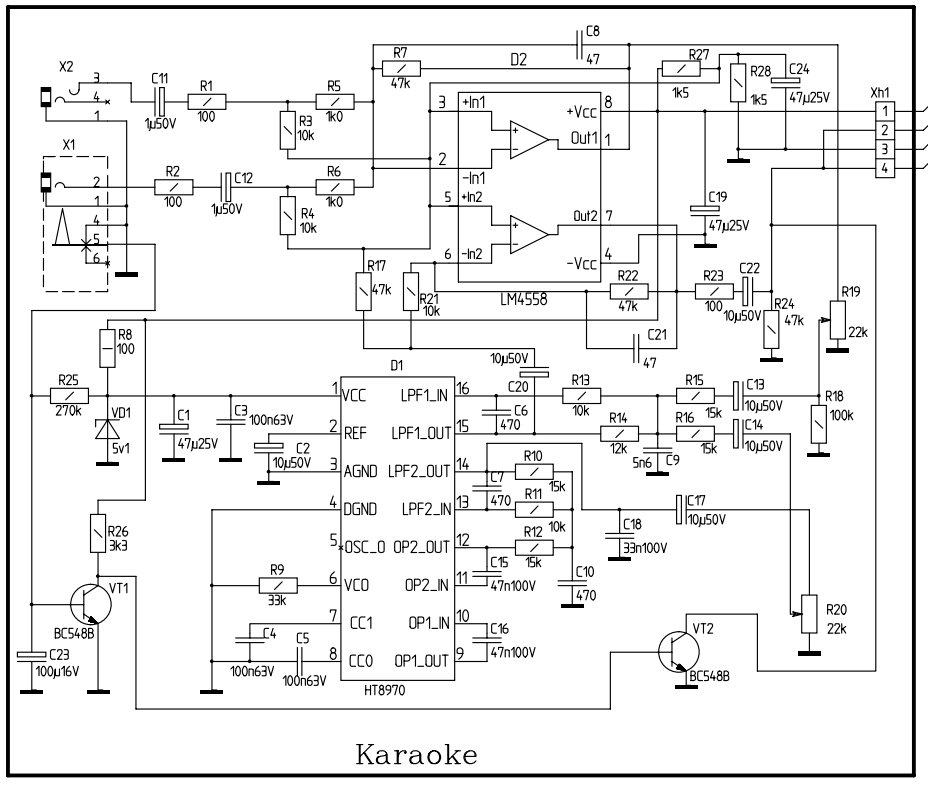
Karaoke
X2
X1
C11 1µ50V
R1 100
R2 100
C12 1µ50V
R3 10k
R4 10k
R5 1k0
R6 1k0
R7 47k
R17 47k
R21 10k
D2
C8 47
R27 1k5
R28 1k5
C24 47µ25V
C19 47µ25V
C21 47
R22 47k
R23 100
C22 10µ50V
R24 47k
R19 22k
Xh1
LM4558
+In1
-In1
+In2
-In2
+Vcc
Out1
Out2
-Vcc
R8 100
R25 270k
VD1 5v1
C1 47µ25V
C3 100n63V
C2 10µ50V
R26 3k3
VT1 BC548B
C23 100µ16V
D1
HT8970
VCC
REF
AGND
DGND
OSC_O
VCO
CC1
CCO
LPF1_IN
LPF1_OUT
LPF2_OUT
LPF2_IN
OP2_OUT
OP2_IN
OP1_IN
OP1_OUT
C20 10µ50V
C6 470
R13 10k
R14 12k
C9 5n6
R15 15k
R16 15k
C13 10µ50V
C14 10µ50V
R10 15k
R11 10k
R12 15k
C7 470
C15 47n100V
C10 470
C17 10µ50V
C18 33n100V
R9 33k
C4 100n63V
C5 100n63V
C16 47n100V
VT2 BC548B
R20 22k
R18 100k

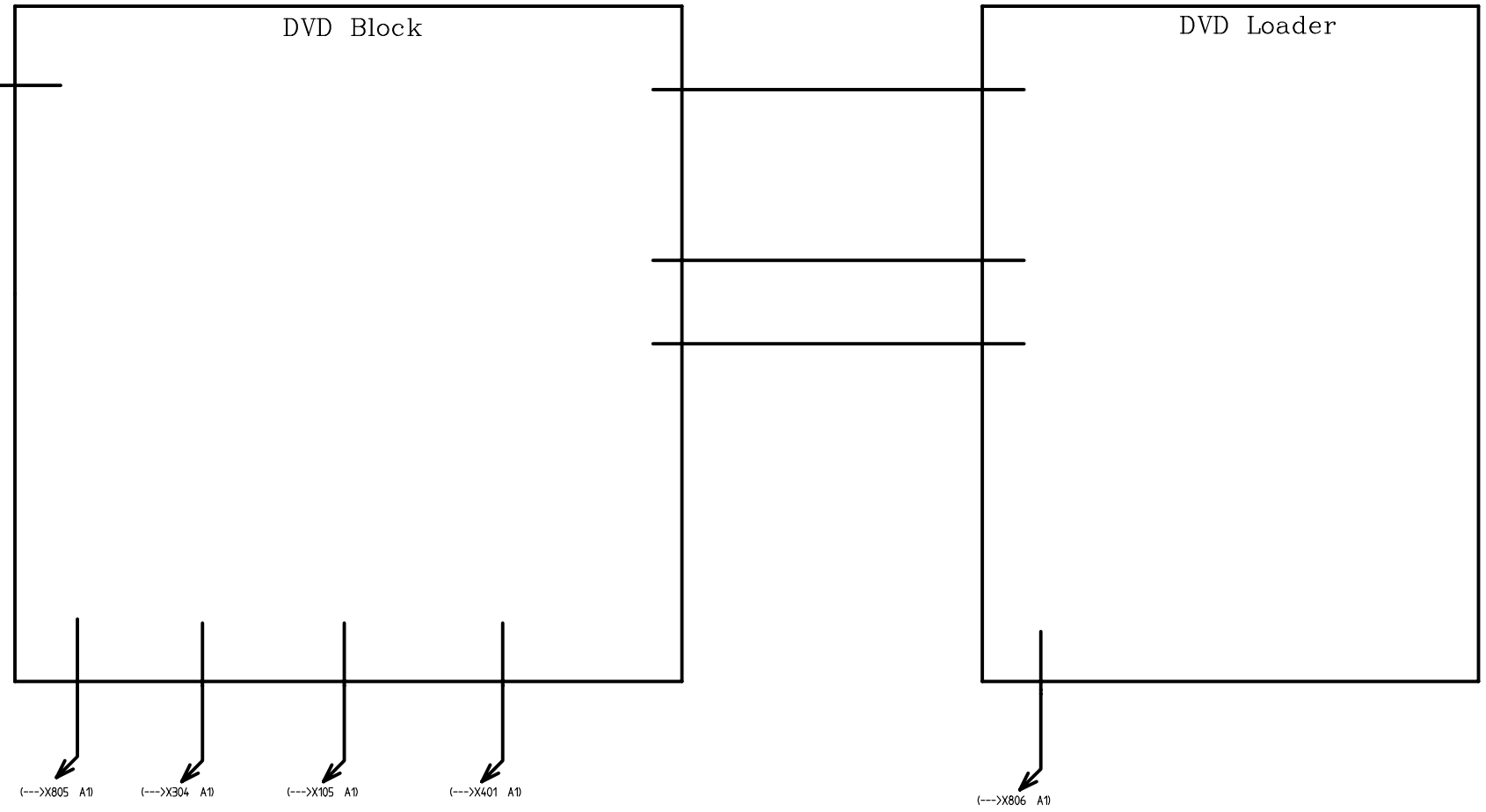
DVD Block
DVD Loader
(--->X805 A1)
(--->X304 A1)
(--->X105 A1)
(--->X401 A1)
(--->X806 A1)

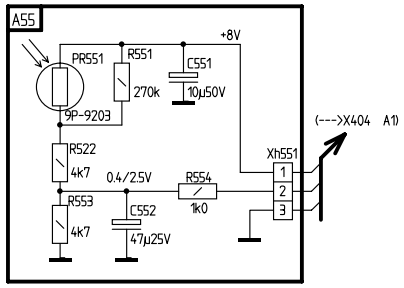
A55
PR551
SP-9203
R551 270k
C551 10µ50V
+8V
R522 4k7
R553 4k7
0.4/2.5V
R554 1k0
C552 47µ25V
Xh551
(--->X404 A1)

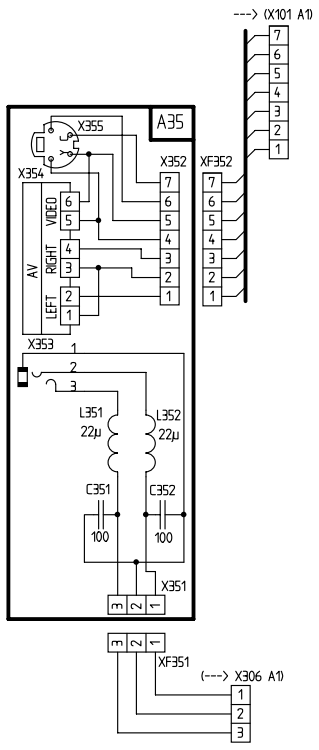
--> (X101 A1)
A35
X355
X354
X352
XF352
VIDEO
RIGHT
LEFT
AV
X353
L351 22µ
L352 22µ
C351 100
C352 100
X351
XF351
(--->X306 A1)

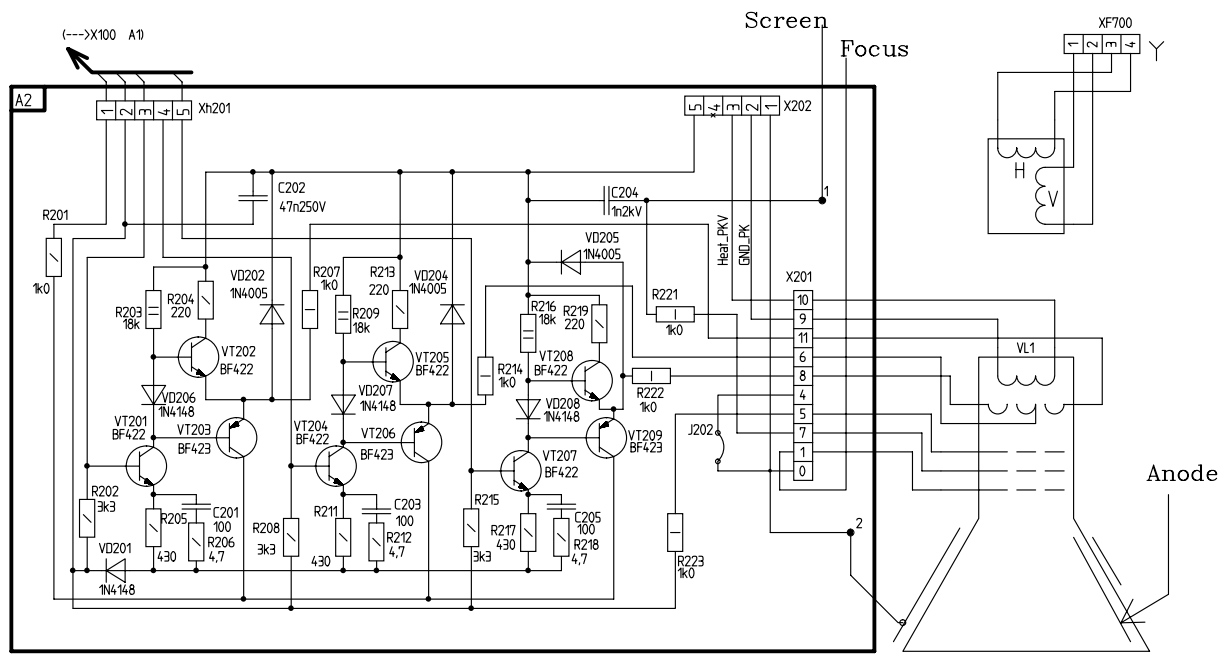
(--->X100 A1)
A2
Xh201
X202
Screen
Focus
XF700
Y
H
V
R201 1k0
C202 47n250V
C204 1n2kV
VD205 1N4005
Heat_PKV
GND_PK
X201
VL1
J202
Anode
VD202 1N4005
VD204 1N4005
VT202 BF422
VT205 BF422
VT208 BF422
VT209 BF423
VT201 BF422
VT203 BF423
VT204 BF422
VT206 BF423
VT207 BF422
VD206 1N4148
VD207 1N4148
VD208 1N4148
VD201 1N4148
R202 3k3
R203 18k
R204 220
R205 430
R206 4,7
C201 100
R207 1k0
R208 3k3
R209 18k
R211 430
R212 4,7
C203 100
R213 220
R214 1k0
R215 3k3
R216 18k
R217 430
R218 4,7
C205 100
R219 220
R221 1k0
R222 1k0
R223 1k0