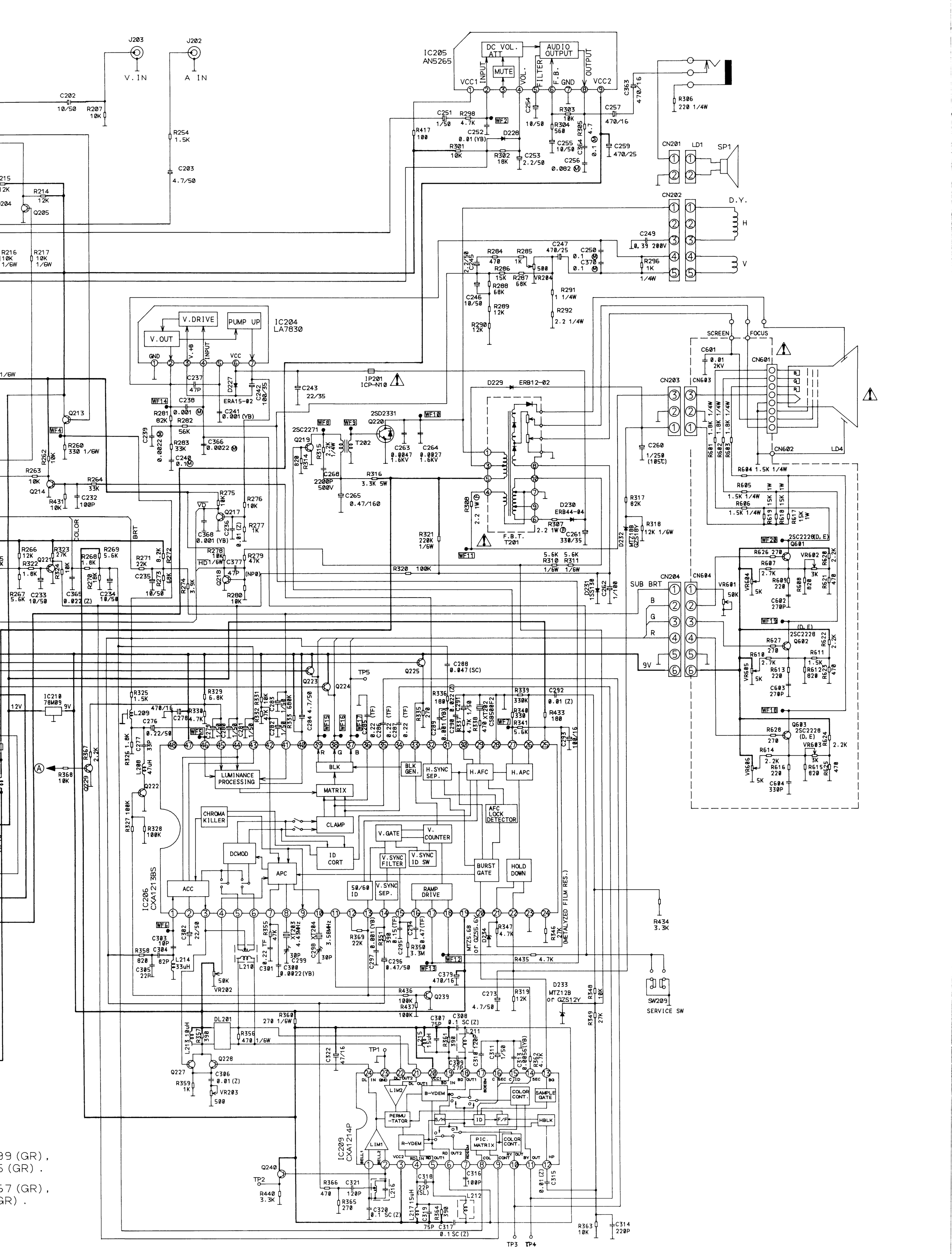
IC205
AN5265
DC VOL. ATT
AUDIO OUTPUT
MUTE
IC204
LA7830
V.DRIVE
PUMP UP
V.OUT
IC206
CXA1213BS
LUMINANCE PROCESSING
MATRIX
CHROMA KILLER
CLAMP
DCMOD
ID CORT
APC
ACC
V.GATE
V. COUNTER
V.SYNC FILTER
V.SYNC ID SW
BURST GATE
HOLD DOWN
AFC LOCK DETECTOR
H.SYNC SEP.
H.AFC
H.APC
BLK GEN.
BLK
50/60 ID
V.SYNC SEP.
RAMP DRIVE
IC209
CXA1214P
LIM2
B-YDEM
PERMU -TATOR
S/H
ID
F/F
HBLK
COLOR CONT.
SAMPLE GATE
LIM1
R-YDEM
PIC. MATRIX
F.B.T. T201
IC210 78M09
SW209 SERVICE SW
CN201
CN202
CN203
CN204
CN601
CN602
CN603
CN604
LD1
LD4
SP1
D.Y.
H
V
SCREEN
FOCUS
SUB BRT
B
G
R
9V
12V
TP1
TP2
TP3
TP4
TP5
J203
V. IN
J202
A IN

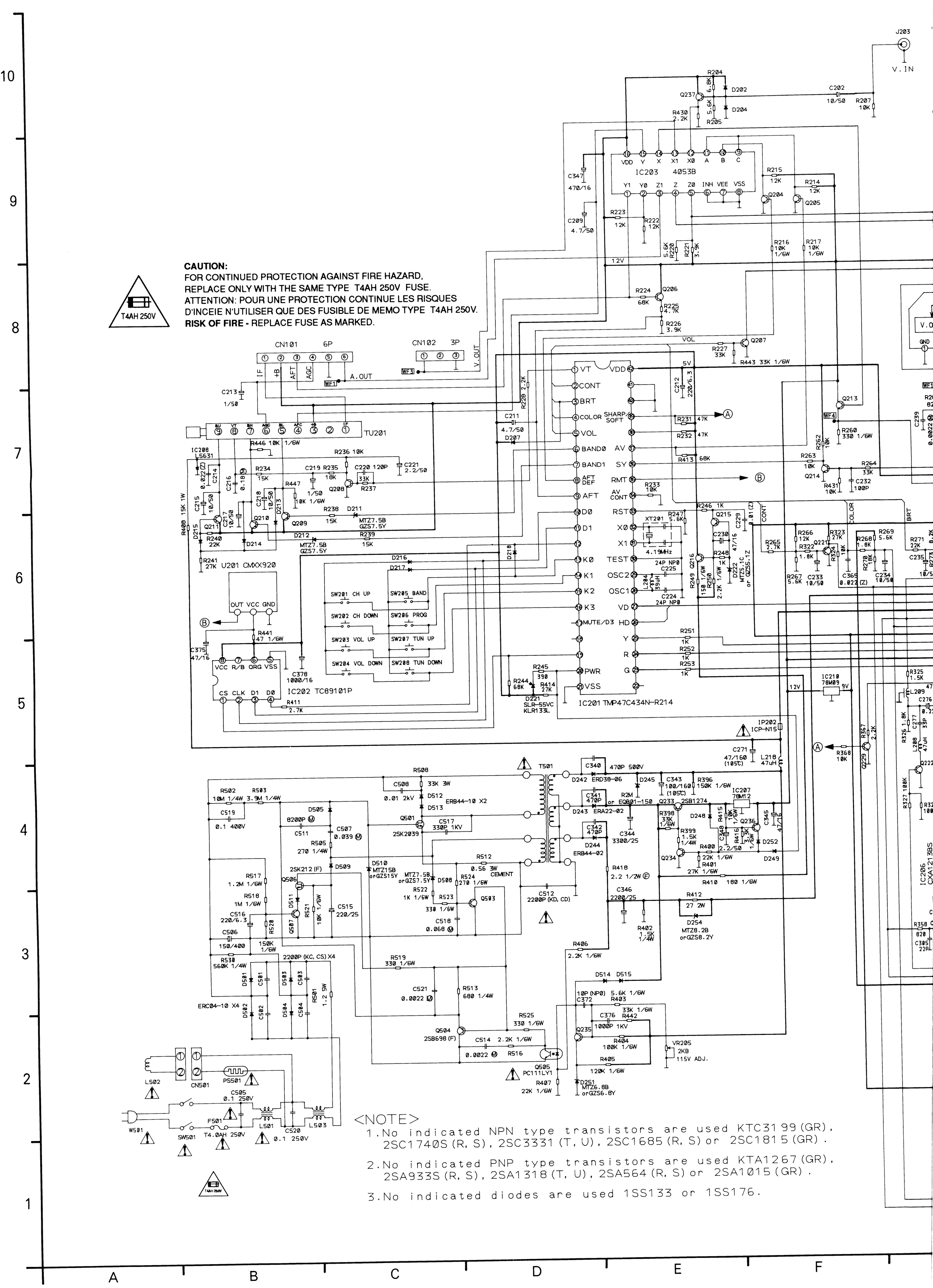

<NOTE>

1. No indicated NPN type transistors are used KTC3199(GR), 2SC1740S(R, S), 2SC3331(T, U), 2SC1685(R, S) or 2SC1815(GR).
2. No indicated PNP type transistors are used KTA1267(GR), 2SA933S(R, S), 2SA1318(T, U), 2SA564(R, S) or 2SA1015(GR).
3. No indicated diodes are used 1SS133 or 1SS176.