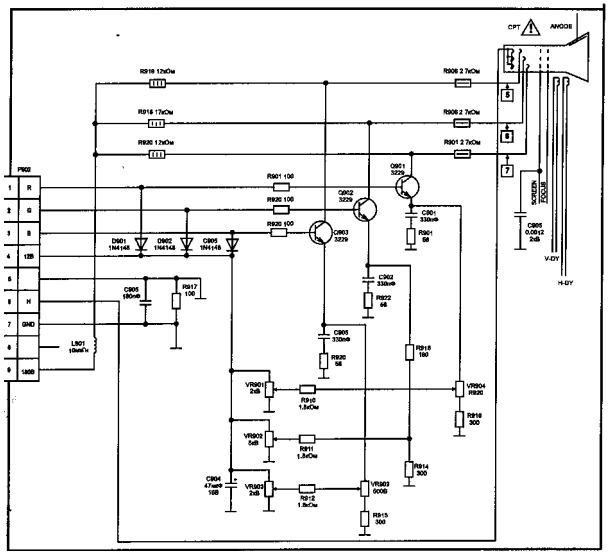

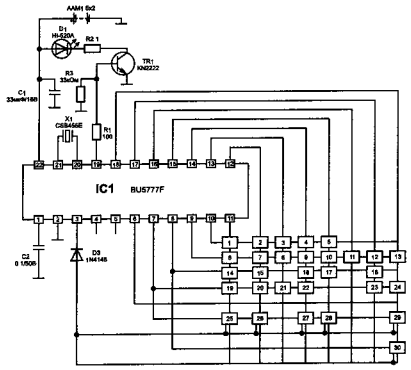

	ФУНКЦИЯ
1	8
2	9
3	Q.VIEW
4	RECALL
5	-/--
6	0
7	1
8	2
9	3
10	4
11	5
12	6
13	7
14	POWER
15	MUTE
16	TV/AV
17	PICTURE
18	SLEEP
19	CH+
20	CH-
21	VOL+
22	VOL-
23	ENTER
24	ENTER
25	ENTER
26	ENTER
27	SET-UP
28	ENTER
29	SMC
30	PSM

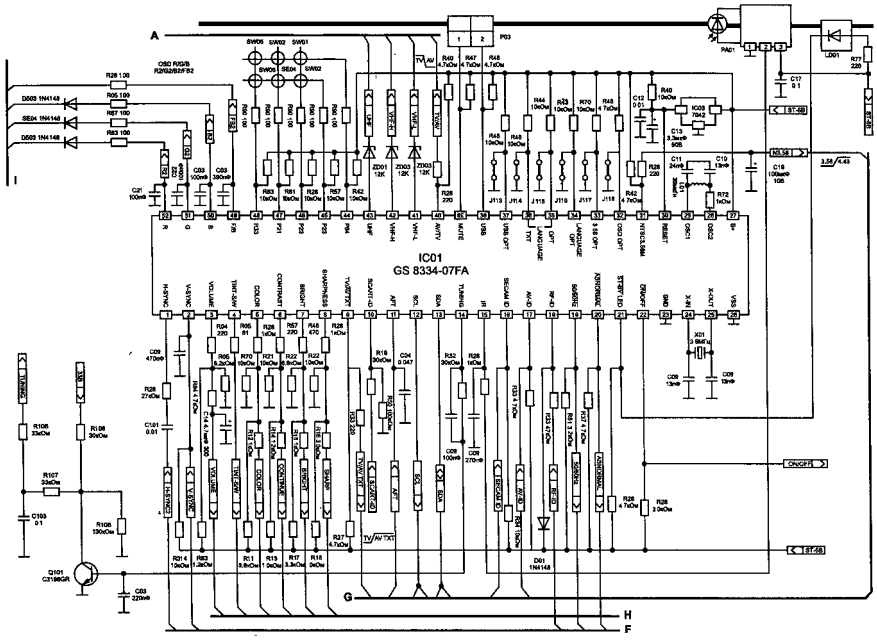
IC01
GS 8334-07FA

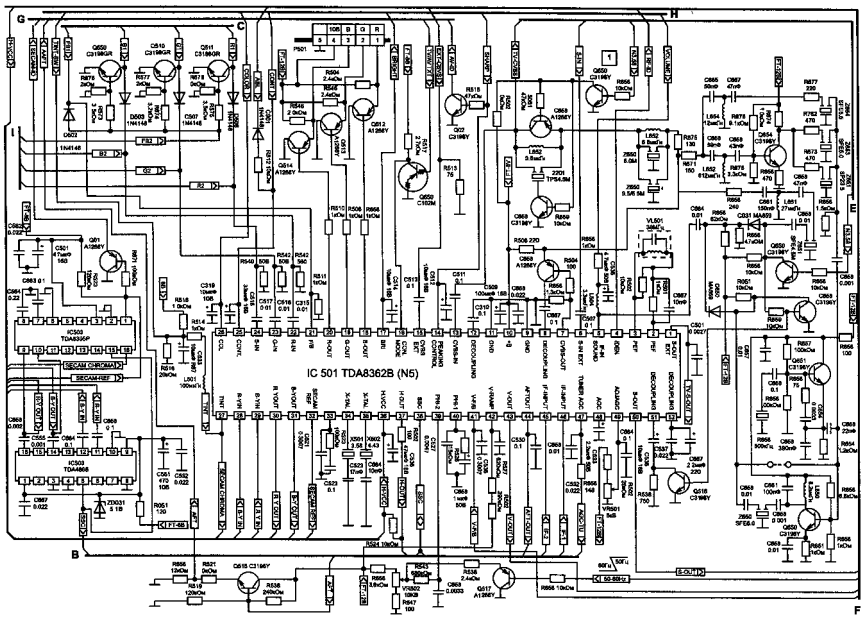
IC 501 TDA8362B (N5)

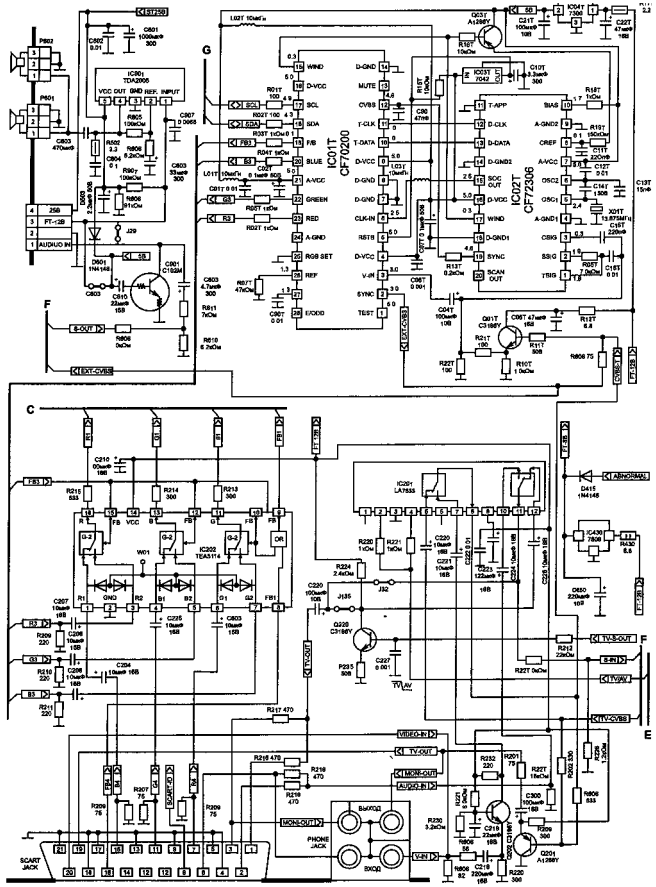
IC01T
CF70200
IC02T
CF72306
IC301
LA7833
SCART JACK
PHONE JACK

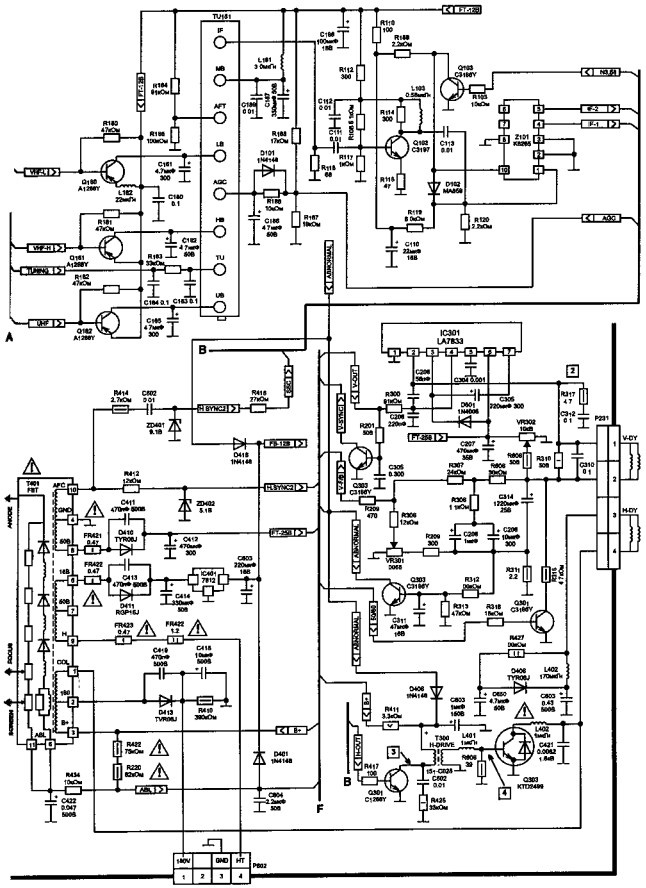

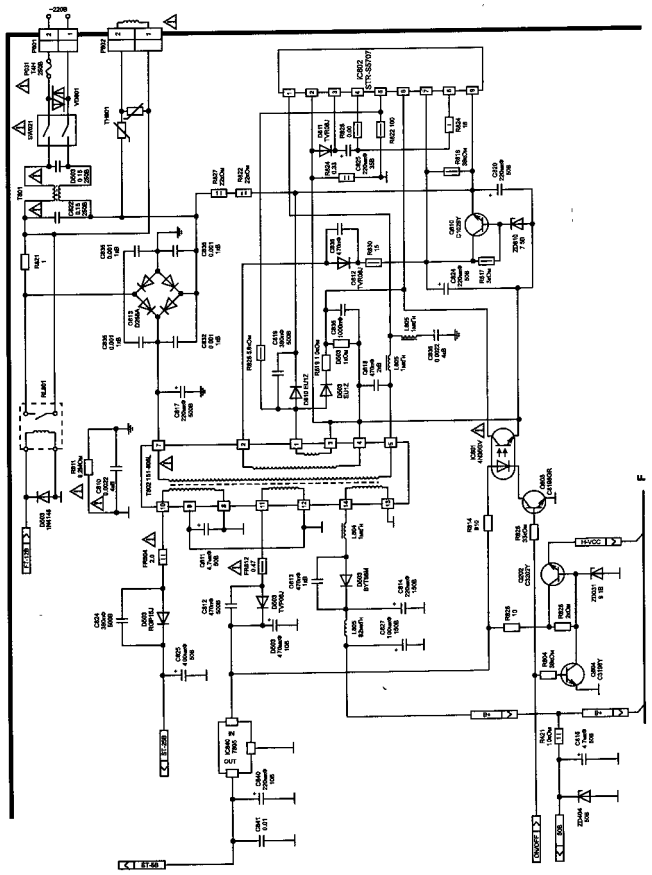

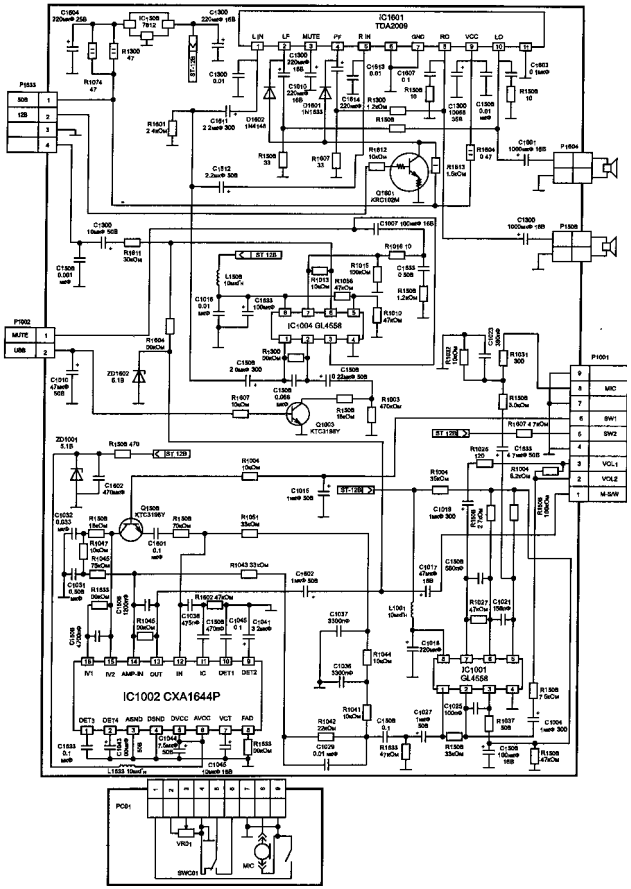
IC1001
TDA2009
IC1002 CXA1644P
IC1004 GL4558
IC1001
GL4558
Q1001
KTC3198Y
Q1003
KTC3198Y
Q1101
XRC102M
P1002
MUTE
USB
P1001
MIC
SW1
SW2
VCL1
VCL2
M-S/W
P1604
P1608
P1633
PCB1
VR01
SWC01
MIC